No.:	RMGW-K-HTS-0001 /4
Date:	2023. 1. 10

Data sheet

Title: FIXED THICK FILM CHIP RESISTORS; RECTANGULAR TYPE ANTI-SULFURATION

Style: RMGW06,10,16,20,32,35,50,63

RoHS COMPLIANCE ITEM
Halogen and Antimony Free

Note: ・Stock conditions
Temperature: +5°C ~ +35°C
Relative humidity: 25% ~ 75%
The period of guarantee: Within 2 year from shipment by the company.
Solderability shall be satisfied.

・Product specification contained in this data sheet are subject to change at any time without notice

・If you have any questions or a Purchasing Specification for any quality agreement is necessary, please contact our sales staff.

釜屋電機株式會社
KAMAYA ELECTRIC CO., LTD.

Hokkaido Research Center
Approval by: T. Sannomiya
Drawing by: M. Shibuya

1. Scope

1.1 This data sheet covers the detail requirements for fixed thick film chip resistors; rectangular type & anti-sulfuration,, style of RMGW06,10,16,20,32,35,50,63.

1.2 Applicable documents

JIS C 5201–1: 2011, JIS C 5201–8: 2014, JIS C 5201–8–1: 2014
IEC60115–1: 2008, IEC60115–8: 2009, IEC60115–8–1: 2014
EIAJ RC–2134C–2010

2. Classification

Type designation shall be the following form.

(Example)

1)	RMGW	16	K	123	J	TP
	1	2	3	4	5	6
	Style					
2)	RMGW	16		JP		TP
	1	2		4		6
	Style					

1 Fixed thick film chip resistors; rectangular type & anti-sulfuration
2 Rated dissipation and / or dimension
Style

3 Temperature coefficient of resistance

K	$\pm 100\times 10^{-6}$/ °C
–(Dash)	Standard

4 Rated resistance

123	E24 Series, 3 digit, Ex. 123--> 12kΩ,
1000	E96 Series, 4 digit, Ex. 1000-->100Ω 1022--> 10.2kΩ
JP	Chip jumper

5 Tolerance on rated resistance

D	±0.5%
F	±1%
J	±5%

6 Packaging form

B	Bulk (loose package)
PA	Press pocket taping
TH	Paper taping
TP	
TE	Embossed taping

3. Rating

The ratings shall be in accordance with Table–1.

3.1 Resistor

Table–1(1)

Style	Rated dissipation (W)	Temperature coefficient of resistance (10^{-6} / °C)		Rated resistance range (Ω)	Preferred number series for resistors	Tolerance on rated resistance
RMGW06	0.05	Standard	±200	10~1M	E24, 96	F(±1%)
			+350~-100	4.02~9.76		
			+600~-200	1~3.92		
		Standard	±200	10~1M	E24	J(±5%)
			+350~-100	4.3~9.1		
			+600~-200	1~3.9		
RMGW10	0.1	K	±100	10~1M	E24, 96	D(±0.5%), F(±1%)
		Standard	±200	1.02M~10M		
				1~9.76		F(±1%)
		K	±100	10~1M	E24	J(±5%)
		Standard	±200	1.1M~10M		
				1.0~9.1		
RMGW16	0.1	K	±100	10~1M	E24, 96	D(±0.5%), F(±1%)
		Standard	±200	1.02M~10M		
				1~9.76		F(±1%)
		K	±100	10~1M	E24	J(±5%)
		Standard	±200	1.1M~10M		
				1.0~9.1		
RMGW20	0.125	K	±100	10~1M	E24, 96	D(±0.5%), F(±1%)
		Standard	±200	1.02M~10M		
				1~9.76		F(±1%)
		K	±100	10~1M	E24	J(±5%)
		Standard	±200	1.1M~10M		
				1.0~9.1		
RMGW32	0.25	K	±100	10~1M	E24, 96	D(±0.5%), F(±1%)
		Standard	±200	1.02M~10M		
				1~9.76		F(±1%)
		K	±100	10~1M	E24	J(±5%)
		Standard	±200	1.1M~10M		
				1.0~9.1		
RMGW35	0.33	K	±100	10~1M	E24, 96	D(±0.5%), F(±1%)
		Standard	±200	1.02M~10M		
				1~9.76		F(±1%)
		K	±100	10~1M	E24	J(±5%)
		Standard	±200	1.1M~10M		
				1.0~9.1		

Table–1(2)

Style	Rated dissipation (W)	Temperature coefficient of resistance (10^{-6} / °C)		Rated resistance range (Ω)	Preferred number series for resistors	Tolerance on rated resistance
RMGW50	0.75	K	±100	10~1M	E24, 96	D(±0.5%), F(±1%)
		Standard	±200	1.02M~10M		
				1~9.76		F(±1%)
		K	±100	10~1M	E24	J(±5%)
		Standard	±200	1.1M~10M		
				1.0~9.1		
RMGW63	1	K	±100	10~1M	E24, 96	D(±0.5%), F(±1%)
		Standard	±200	1.02M~10M		
				1~9.76		F(±1%)
		K	±100	10~1M	E24	J(±5%)
		Standard	±200	1.1M~10M		
				1.0~9.1		

Style	Limiting element voltage (V)	Insulation voltage (V)	Category temperature range(°C)
RMGW06	25	50	–55~+155
RMGW10	50	100	
RMGW16			
RMGW20	150	500	
RMGW32	200		
RMGW35			
RMGW50			
RMGW63			

3.2 Chip Jumper

Table–1(3)

Style	Chip jumper symbol	Resistance value of chip jumper	Rated current of chip jumper (A)
RMGW06	JP	50mΩmax.	1
RMGW10			1
RMGW16			1
RMGW20			2
RMGW32			2
RMGW35			2
RMGW50			2
RMGW63			2

3.3 Climatic category

55/155/56

Lower category temperature	– 55 °C
Upper category temperature	+155 °C
Duration of the damp heat, steady state test	56days

3.4 Stability class

2%

Limits for change of resistance:

–for long–term tests ±(2%+0.1Ω) Chip jumper: 50 mΩ max.
*RMGW06: ±(3%+0.1Ω)

–for short–term tests ±(0.5%+0.05Ω) Chip jumper: 50 mΩ max.

3.5 Derating

The derated values of dissipation (or current rating in case of chip jumper) at temperature in excess of 70 °C shall be as indicated by the following curve.

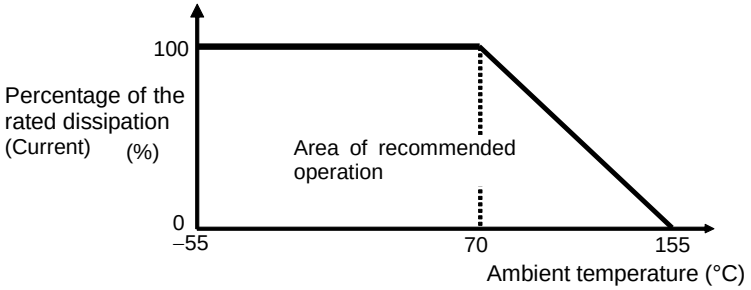

Figure–1 Derating curve

3.6 Rated voltage

d. c. or a. c. r. m. s. voltage calculated from the square root of the product of the rated resistance and the rated dissipation.

$$E = \sqrt{P \cdot R}$$

E : Rated voltage (V)
P : Rated dissipation (W)
R : Rated resistance (Ω)

Limiting element voltage can only be applied to resistors when the resistance value is equal to or higher than the critical resistance value.

At high value of resistance, the rated voltage may not be applicable.

4. Packaging form

The standard packaging form shall be in accordance with Table–2.

Table–2

Symbol	Packaging form		Standard packaging quantity / units	Application
B	Bulk (loose package)		1,000 pcs.	RMGW06,10,16,20,32,35, 50,63
PA	Press pocket taping (paper taping)	8mm width, 2mm pitches	15,000 pcs.	RMGW06
TH	Paper taping	8mm width, 2mm pitches	10,000 pcs.	RMGW10
TP	Paper taping	8mm width, 4mm pitches	5,000 pcs.	RMGW16,20,32
TE	Embossed taping	8mm width, 4mm pitches	4,000 pcs.	RMGW35
		12mm width, 4mm pitches		RMGW50,63

5. Dimensions

5.1 The resistor shall be of the design and physical dimensions in accordance with Figure–2 and Table–3.

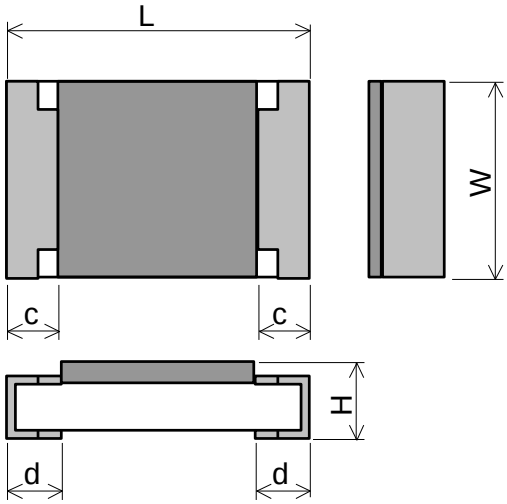

Figure–2

Table–3 Unit : mm

Style	L	W	H	c	d
RMGW06	0.6±0.03	0.3±0.03	0.23±0.03	0.15±0.10	0.15±0.05
RMGW10	1.0±0.05	0.5±0.05	0.35±0.05	0.2±0.1	$0.25^{+0.05}_{-0.10}$
RMGW16	1.6±0.1	$0.8^{+0.15}_{-0.05}$	0.45±0.10	0.3±0.1	0.3±0.1
RMGW20	2.0±0.1	1.25±0.10	0.55±0.10	0.4±0.2	0.4±0.2
RMGW32	3.1±0.1	1.6±0.15	0.55±0.10	0.5±0.25	0.5±0.25
RMGW35	3.1±0.15	2.5±0.15	0.55±0.15	0.5±0.25	0.5±0.25
RMGW50	5.0±0.15	2.5±0.15	0.55±0.15	0.6±0.2	0.6±0.2
RMGW63	6.3±0.15	3.2±0.15	0.55±0.15	0.6±0.2	0.6±0.2

5.2 Net weight (Reference)

Style	Net weight(mg)
RMGW06	0.16
RMGW10	0.6
RMGW16	2
RMGW20	5
RMGW32	9
RMGW35	16
RMGW50	25
RMGW63	40

6. Marking

The Rated resistance of ,RMGW06, 10 should not be marked.

6.1 Resistor

The Rated resistance shall be marked in 3 digits (E24) or 4 digits (E96) and marked on over coat side.

- E24 series: 3 digits, E96 series: 4 digits

  In case of the resistance value that E96 overlaps with E24, It is marked by either.

The Rated resistance of RMGW16 should not be marked in 4 digits(E96).

Marking example	Contents	Application
123	12×10^{3} [Ω] → 12 [kΩ]	E24(RMGW16,20,32,35,50,63)
2R2	2. 2 [Ω]	E24(RMGW16,20,32,35,50,63)
5623	562×10^{3} [Ω] → 562 [kΩ]	E96(RMGW20,32,35,50,63)
12R7	12.7 [Ω]	E96(RMGW20,32,35,50,63)

6.2 Marking example of Jumper Chip

Marking example	Contents	Application
○	JP	RMGW16,20,32
000	JP	RMGW35,50,63

7. Performance

7.1 The standard condition for tests shall be in accordance with Sub–clause 4.2, JIS C 5201–1: 2011.

7.2 The performance shall be satisfied in Table–4.

Table–4(1)

No.	Test items	Condition of test (JIS C 5201–1)	Performance requirements
1	Visual examination	Sub–clause 4.4.1 Checked by visual examination.	As in 4.4.1 The marking shall be legible, as checked by visual examination.
2	Dimension Resistance	Sub–clause 4.4.2 Sub–clause 4.5	As specified in Table–3 of this specification. As in 4.5.2 The resistance value shall correspond with the rated resistance taking into account the specified tolerance. Chip jumper: 50mΩ max.
3	Voltage proof	Sub–clause 4.7 Method: 4.6.1.4 Test voltage: Alternating voltage with a peak value of 1.42 times the insulation voltage. Duration: 60 s ± 5 s Insulation resistance Test voltage: Insulation voltage Duration: 1 min.	No breakdown or flash over R ≥ 1 G Ω
4	Solderability	Sub–clause 4.17 Without ageing Flux: The resistors shall be immersed in a non–activated soldering flux for 2s. Bath temperature: 235 °C ± 5 °C Immersion time: 2 s ± 0.5 s	As in 4.17.4.5 The terminations shall be covered with a smooth and bright solder coating.
5	Mounting Overload (in the mounted state) Solvent resistance of the marking	Sub–clause 4.31 Substrate material: Epoxide woven glass Sub–clause 4.13 The applied voltage shall be 2.5 times the rated voltage or twice the limiting element voltage, whichever is the less severe. Duration: 2 s Visual examination Resistance Sub–clause 4.30 Solvent: 2–propanol Solvent temperature: 23 °C ± 5 °C Method 1 Rubbing material: cotton wool Without recovery	 No visible damage ΔR ≤ ± (1%+0.05Ω) Chip jumper: 50mΩ max. Legible marking

Table–4(2)

No	Test items	Condition of test (JIS C 5201–1)	Performance requirements
6	Mounting	Sub–clause 4.31 Substrate material: Epoxide woven glass	
	Bound strength of the end face plating	Sub–clause 4.33 Bent value: 3 mm (3225 size max.) 1 mm (5025 siz min.) Resistance	 ΔR ≤ ± (0.5%+0.05Ω) Chip jumper: 50mΩ max.
	Final measurements	Sub–clause 4.33.6 Visual examination	No visible damage
7	Resistance to soldering heat	Sub–clause 4.18 Solder temperature: 260 °C ± 5 °C Immersion time: 10 s ± 0.5 s Visual examination Resistance	 As in 4.18.3.4 No sign of damage such as cracks. ΔR ≤ ± (0.5%+0.05Ω) Chip jumper: 50mΩ max.
	Component solvent resistance	Sub–clause 4.29 Solvent: 2–propanol Solvent temperature: 23 °C ± 5 °C Method 2 Recovery: 48 h Visual examination Resistance	 No visible damage ΔR ≤ ± (0.5%+0.05Ω) Chip jumper: 50mΩ max.
8	Mounting	Sub–clause 4.31 Substrate material: Epoxide woven glass	
	Adhesion	Sub–clause 4.32 Force: 5 N (RMGW06: 3N) Duration: 10 s ± 1 s Visual examination	 No visible damage
	Rapid change temperature	Sub–clause 4.19 Lower category temperature: –55 °C Upper category temperature: +155 °C Duration of exposure at each temperature: 30 min. Number of cycles: 5 cycles. Visual examination Resistance	 No visible damage ΔR ≤ ±(0.5%+0.05Ω) Chip jumper: 50mΩ max.

Table–4(3)

No	Test items	Condition of test (JIS C 5201–1)	Performance requirements
9	Climatic sequence –Dry heat –Damp heat, cycle (12+12hour cycle) First cycle –Cold –Damp heat, cycle (12+12hour cycle) Remaining cycle –D.C. load	Sub–clause 4.23 Sub–clause 4.23.2 Test temperature: +155 °C Duration: 16 h Sub–clause 4.23.3 Test method: 2 Test temperature: 55 °C [Severity(2)] Sub–clause 4.23.4 Test temperature –55 °C Duration: 2h Sub–clause 4.23.6 Test method: 2 Test temperature: 55 °C [Severity (2)] Number of cycles: 5 cycles Sub–clause 4.23.7 The applied voltage shall be the rated voltage or the limiting element voltage whichever is the smaller. Duration: 1 min. Visual examination Resistance	No visible damage RMGW06: ΔR/R: Within ±(3%+0.1Ω) Others: ΔR/R: Within ±(2%+0.1Ω) Chip jumper: 50mΩ max.
10	Mounting Endurance at 70 °C	Sub–clause 4.31 Substrate material: Epoxide woven glass (RMGW63 may use Alumina substrate.) Sub–clause 4.25.1 Ambient temperature: 70 °C ± 2 °C Duration: 1000 h The voltage shall be applied in cycles of 1.5 h on and 0.5 h off. The applied voltage shall be the rated voltage or the limiting element voltage whichever is the smaller. Examination at 48 h , 500 h and 1000 h: Visual examination Resistance	No visible damage RMGW06: ΔR/R: Within ±(3%+0.1Ω) Others: ΔR/R: Within ±(2%+0.1Ω) Chip jumper: 50mΩ max.
11	Mounting Variation of resistance with temperature	Sub–clause 4.31 Substrate material: Epoxide woven glass Sub–clause 4.8 –55 °C / +20 °C +20 °C / +155°C	 As in Table–1

Table–4(4)

No	Test items	Condition of test (JIS C 5201–1)	Performance requirements
12	Mounting Damp heat, steady state	Sub–clause 4.31 Substrate material: Epoxide woven glass Sub–clause 4.24 Ambient temperature: 40 °C ± 2 °C Relative humidity : 93 $^{+2}_{-3}$ % a) 1st group: without voltage applied. b) 2nd group: The d. c. voltage shall be applied continuously. The voltage shall be accordance with Sub–clause 4.24.2.1 b). without polarizing voltage [4.24.2.1, c)] Visual examination Resistance	No visible damage Legible marking RMGW06: ΔR/R: Within ±(3%+0.1Ω) Others: ΔR/R: Within ±(2%+0.1Ω) Chip jumper: 50mΩ max.
13	Dimensions (detail) Mounting Endurance at upper category temperature	Sub–clause 4.4.3 Sub–clause 4.31 Substrate material: Epoxide woven glass Sub–clause 4.25.3 Ambient temperature:155 °C ± 2 °C Duration: 1000 h Examination at 48 h, 500 h and 1000 h: Visual examination Resistance	As in Table–3 No visible damage RMGW06: ΔR/R: Within ±(3%+0.1Ω) Others: ΔR/R: Within ±(2%+0.1Ω) Chip jumper: 50mΩ max.
14	Humid Sulfur vapor test (FOS)	ASTM B809 Reagent: Sulfur (Saturated vapor) Test temp.: 60°C Relative humidity: 95%RH Test period: 1000h Resistance	 ΔR ≤ ± (1%+0.05Ω) Chip jumper: 50mΩ max.

8. Taping

8.1 Applicable documents JIS C 0806–3: 2014, EIAJ ET–7200C: 2010

8.2 Taping dimensions

8.2.1 Press pocket taping (Paper taping, 8mm width, 2mm pitches)

Taping dimensions shall be in accordance with Figure–3 and Table–5.

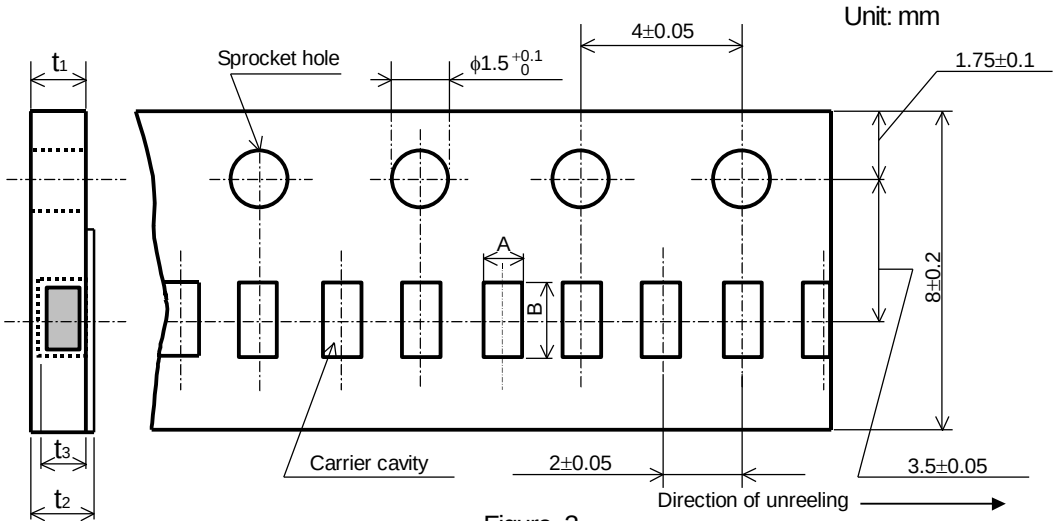

Figure–3

Table–5 Unit: mm

Style	A	B	t_1	t_2	t_3
RMGW06	0.37±0.05	0.67±0.05	0.42±0.03	0.45±0.05	0.27±0.02

8.2.2 Paper taping (8mm width, 2mm pitches)

Taping dimensions shall be in accordance with Figure–4 and Table–6.

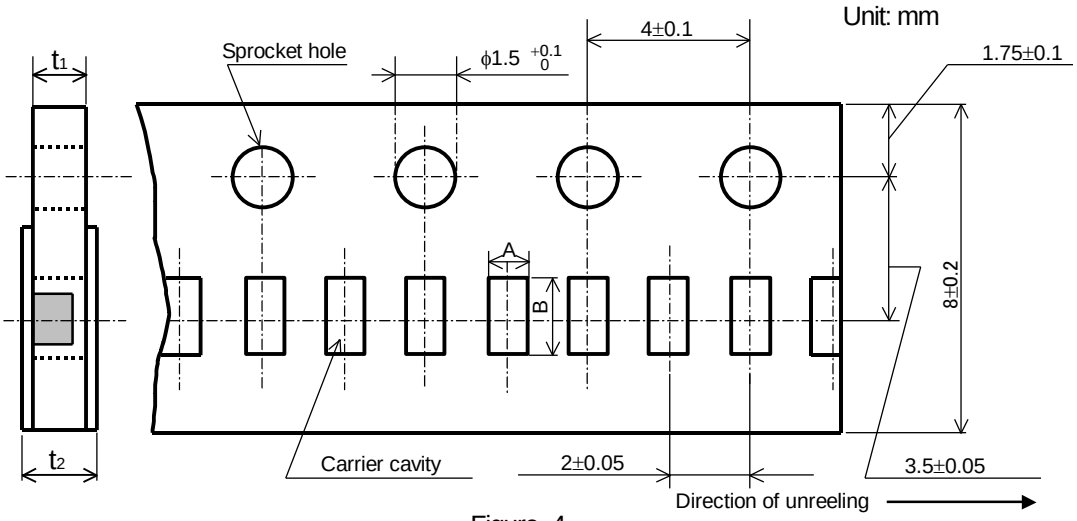

Figure–4

Table–6 Unit: mm

Style	A	B	t_1	t_2
RMGW10	$0.65^{+0.05}_{-0.10}$	$1.15^{+0.05}_{-0.10}$	0.4 ± 0.05	0.5max.

8.2.3 Paper taping (8mm width, 4mm pitches)

Taping dimensions shall be in accordance with Figure–5 and Table–7.

Unit: mm

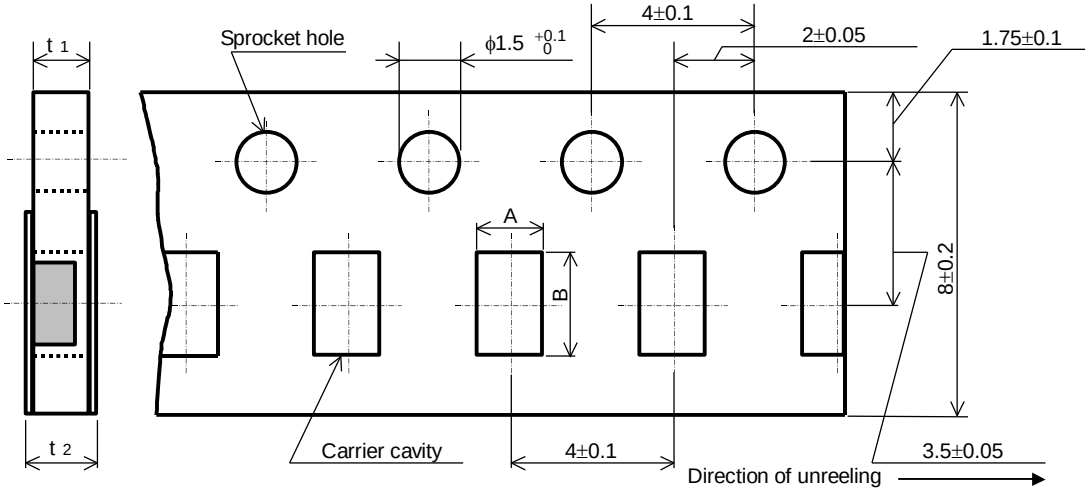

Figure–5

Table–7 Unit: mm

Style	A	B	t_1	t_2
RMGW16	1.15±0.15	1.9±0.2	0.6±0.1	0.8max.
RMGW20	1.65±0.15	2.5±0.2	0.8±0.1	1.0max.
RMGW32	2.00±0.15	3.6±0.2	0.8±0.1	1.0max.

8.2.4 Embossed taping dimensions shall be in accordance with Figure–6 and Table–8.

Unit: mm

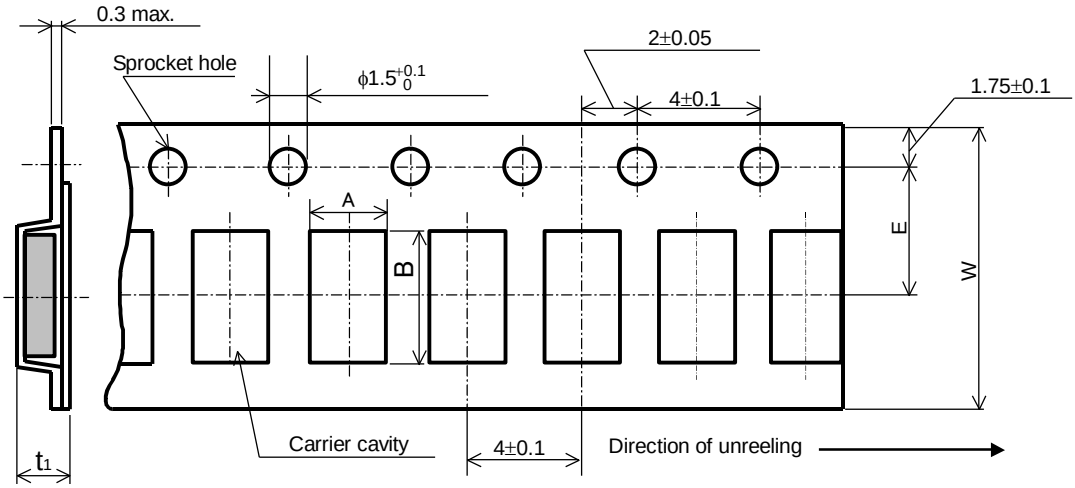

Figure–6

Table–8 Unit: mm

Style	A	B	W	E	t_1
RMGW35	2.85±0.20	3.5±0.2	8.0±0.3	3.5±0.05	1.0±0.2
RMGW50	3.1±0.2	5.5±0.2	12.0±0.3	5.5±0.05	1.1±0.15
RMGW63	3.6±0.2	6.9±0.2	12.0±0.3	5.5±0.05	1.1±0.15

1). The cover tapes shall not cover the sprocket holes.
2). Tapes in adjacent layers shall not stick together in the packing.
3). Components shall not stick to the carrier tape or to the cover tape.
4). Pitch tolerance over any 10 pitches ±0.2mm.
5). The peel strength of the top cover tape shall be with in 0.1N to 0.5N on the test method as shown in the following RMGW06: Figure–7. RMGW10,16,20,32: Figure–8 and RMGW35,50,63 Figure-9.
6). When the tape is bent with the minimum radius for RMGW06,10,16,20,32,35: 25 mm, or RMGW50,63: 30 mm, the tape shall not be damaged and the components shall maintain their position and orientation in the tape.
7). In no case shall there be two or more consecutive components missing.
The maximum number of missing components shall be one or 0.1%, whichever is greater.
8). The resistors shall be faced to upward at the over coating side in the carrier cavity.

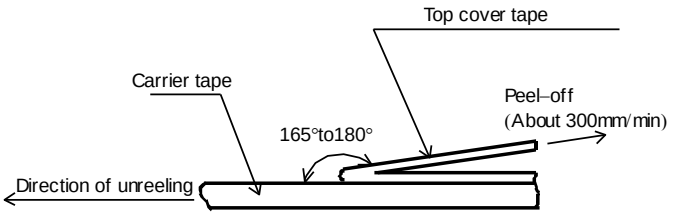

Figure–7

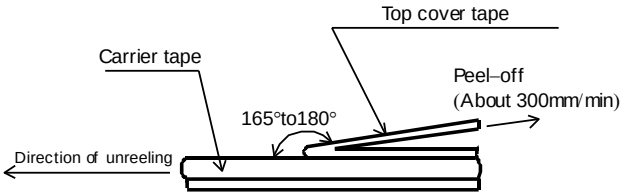

Figure–8

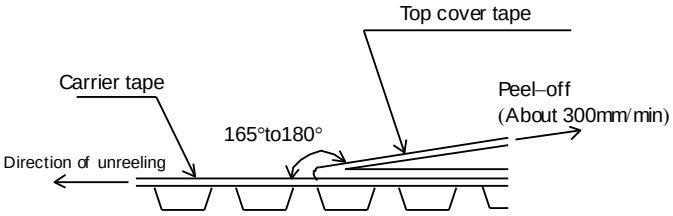

Figure–9

8.3 Reel dimension

Reel dimensions shall be in accordance with the following Figure–10 and Table–9.

Plastic reel (Based on EIAJ ET–7200C)

Unit: mm

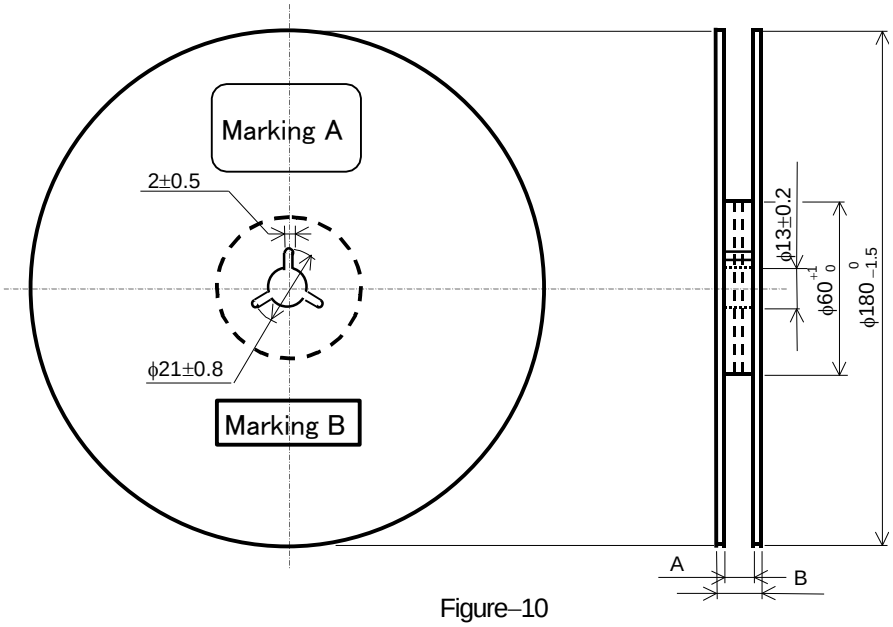

Figure–10

Table–9 Unit: mm

Style	A	B	Note
RMGW06,10,16,20,32,35	9 $^{+1.0}_{0}$	11.4±1.0	Injection molding
		13±1.0	Vacuum forming
RMGW50,63	13 $^{+1.0}_{0}$	17±1.0	Vacuum forming

Note: Marking label shall be marked on a place of Marking A or two place of marking A and B.

8.4 Leader and trailer tape.

(Example)

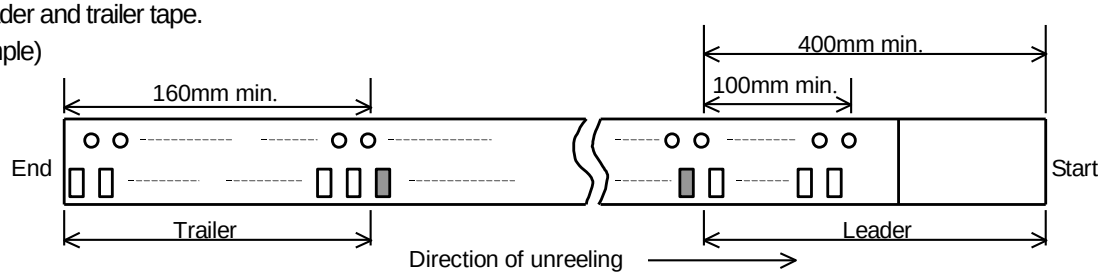

Figure–11

9. Marking on package

The label of a minimum package shall be legibly marked with follows.

9.1 Marking A

(1) Classification

(Style, Temperature coefficient of resistance, Rated resistance, Tolerance on rated resistance, Packaging form)

(2) Quantity (3) Lot number (4) Manufacturer's name or trade mark (5) Others

9.2 Marking B (KAMAYA Control label)